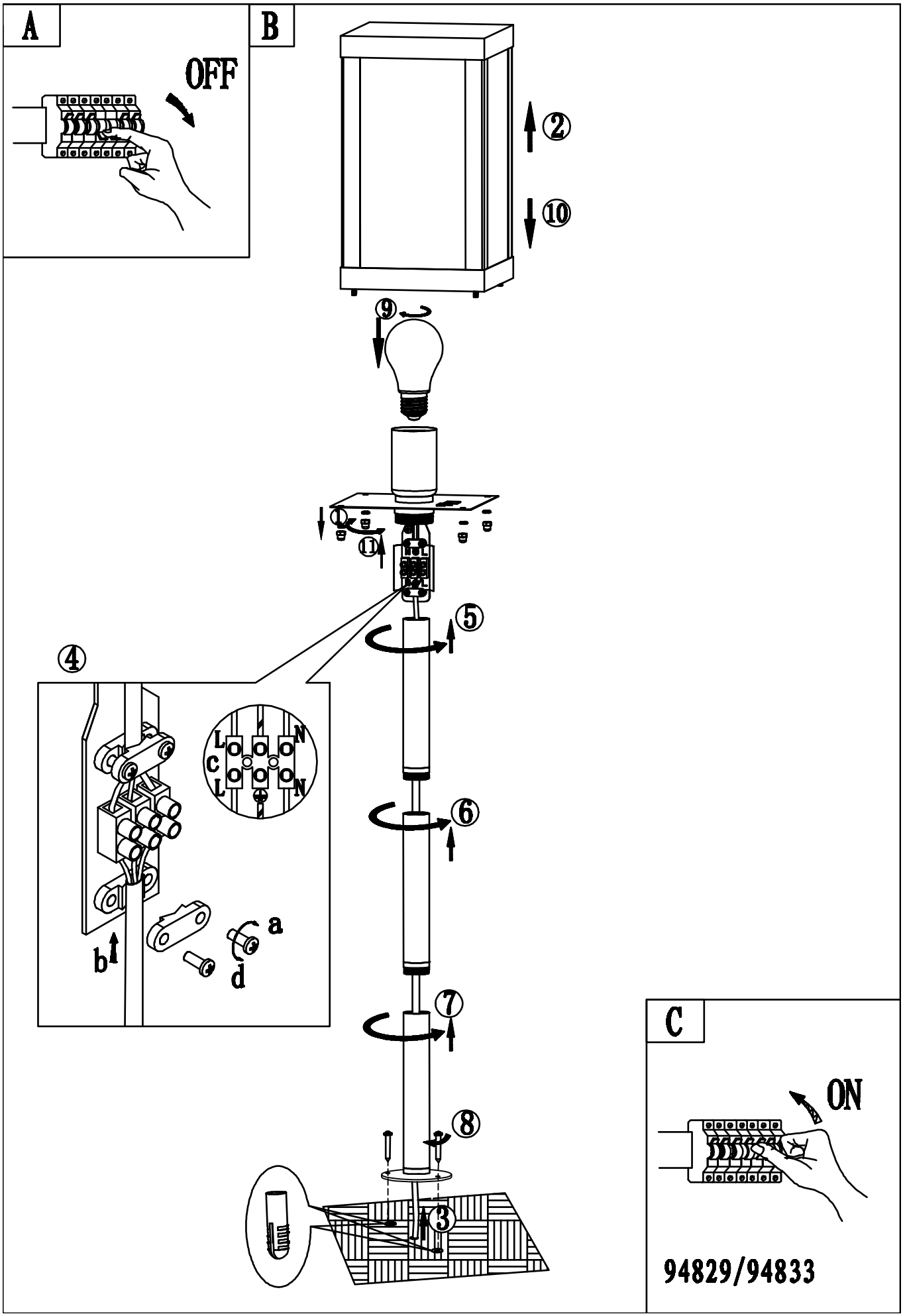
A
OFF
B
②
⑩
⑨
①
⑪
⑤
④
L
N
C
L
N
⑥
a
b
d
⑦
⑧
③
C
ON
94829/94833