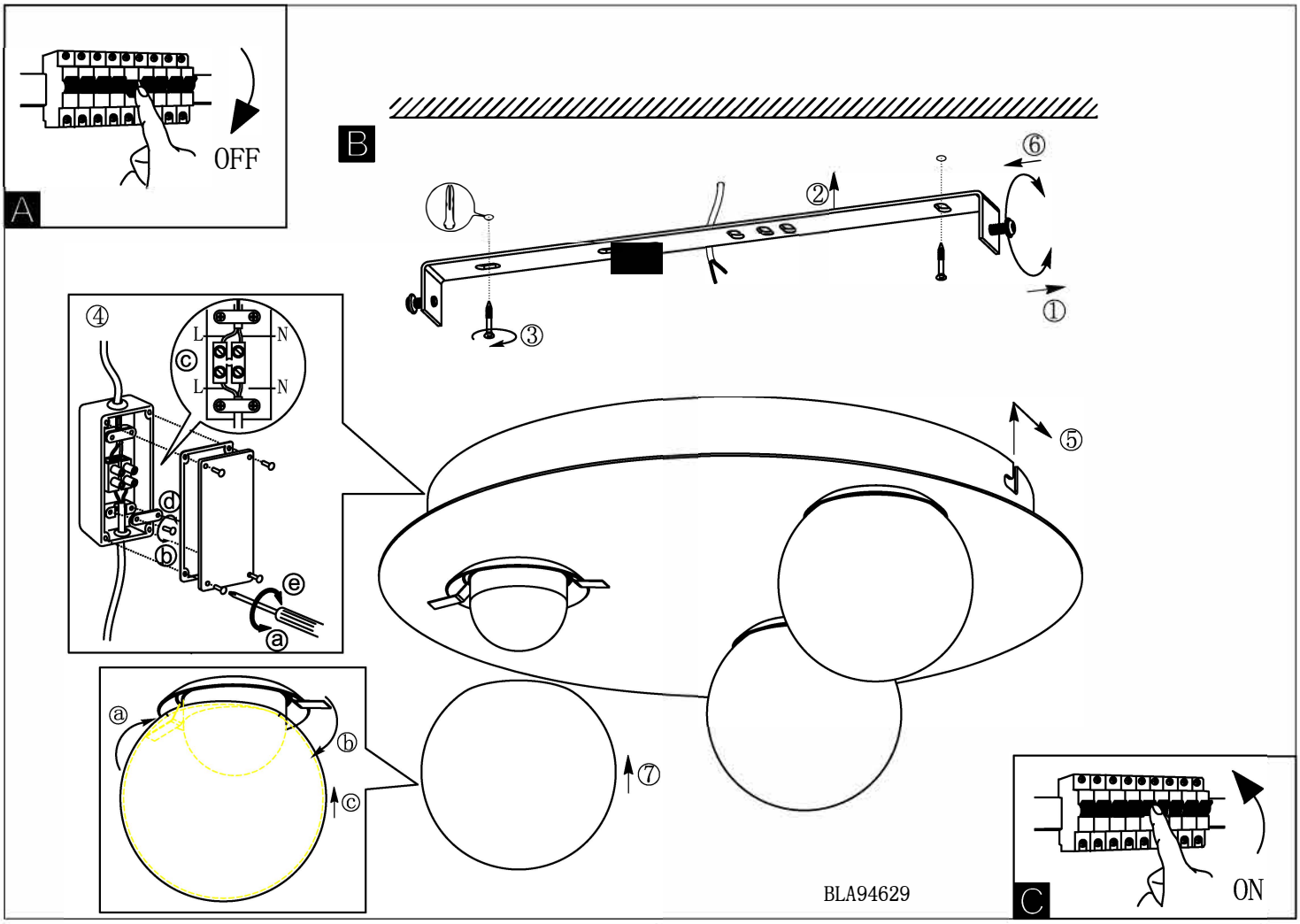
A
OFF
B
①
②
③
④
⑤
⑥
⑦
L
N
L
N
ⓒ
ⓓ
ⓑ
ⓔ
ⓐ
ⓐ
ⓑ
ⓒ
BLA94629
C
ON