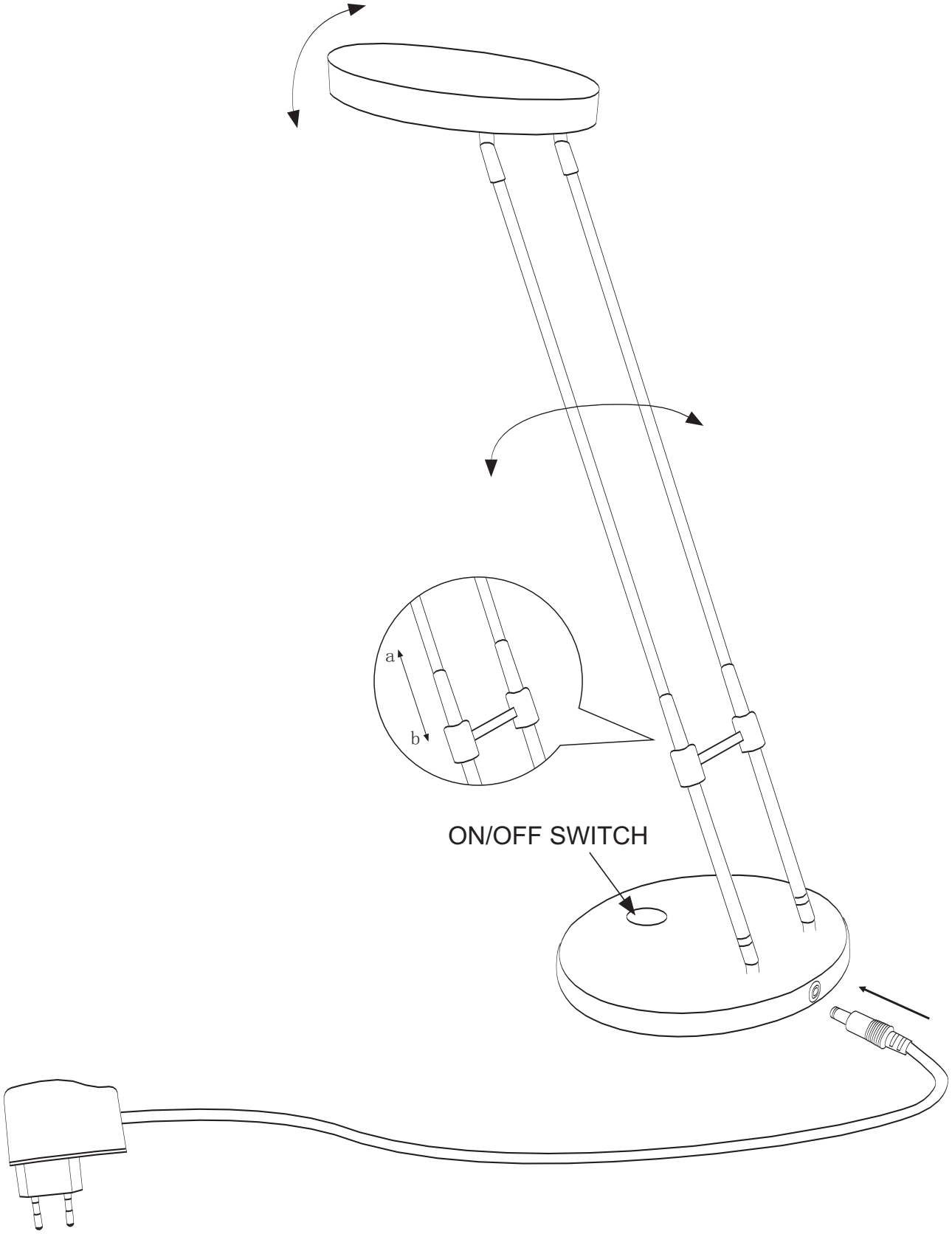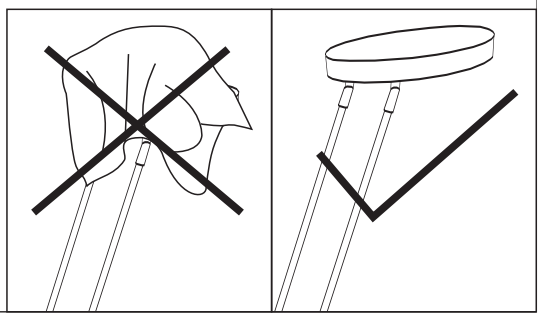
a
b
ON/OFF SWITCH