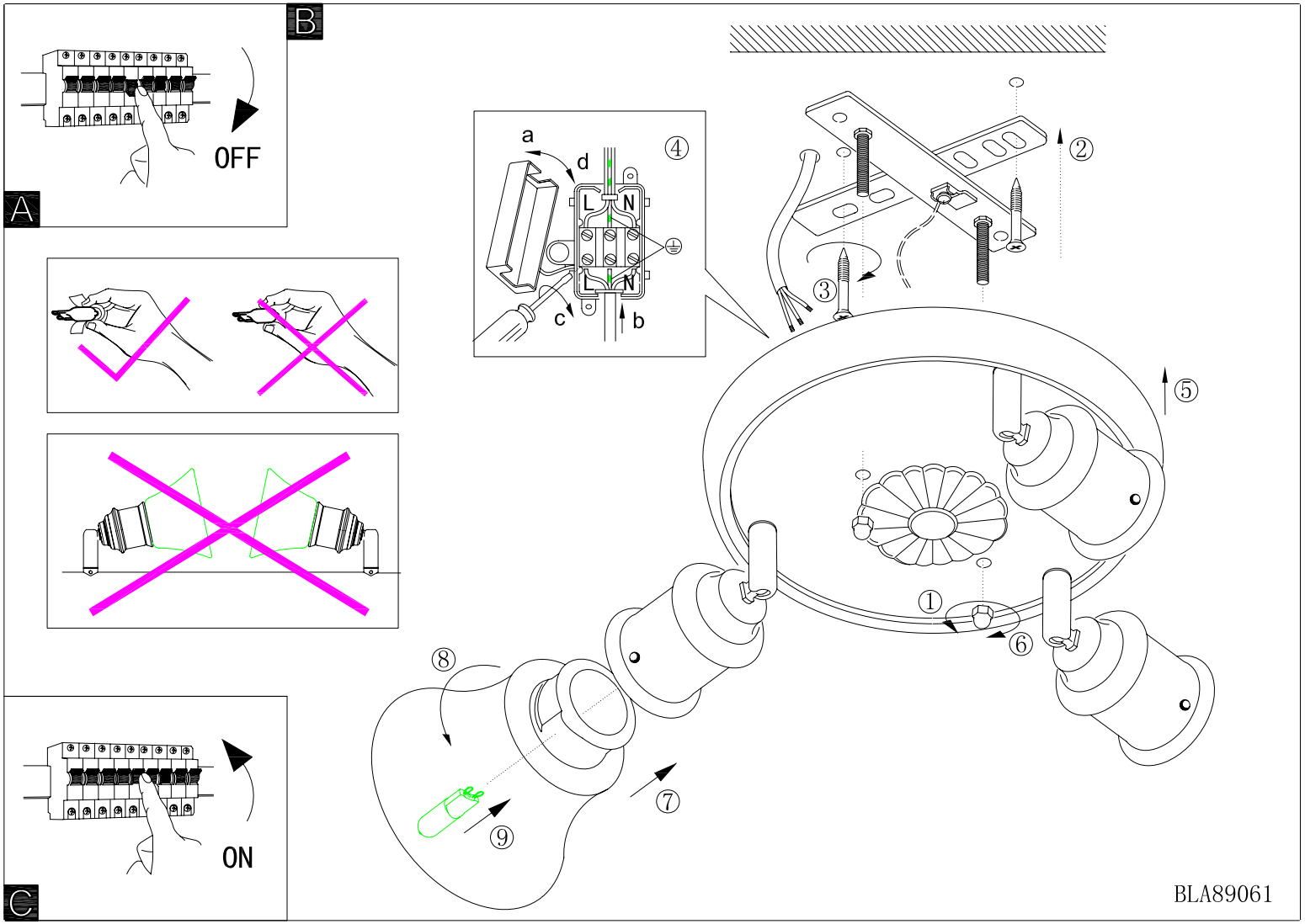
B
OFF
A
a
d
④
L
N
L
N
c
b
②
③
⑤
①
⑥
⑧
⑦
⑨
ON
C
BLA89061