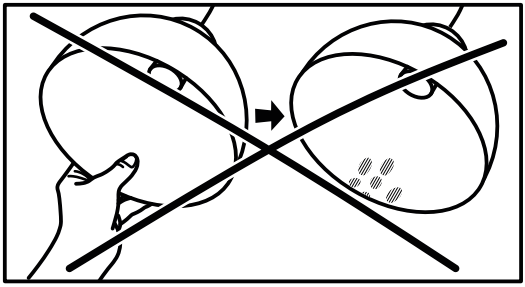

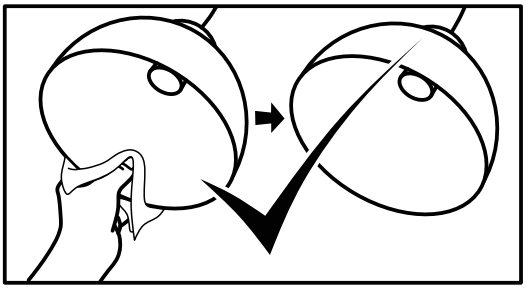

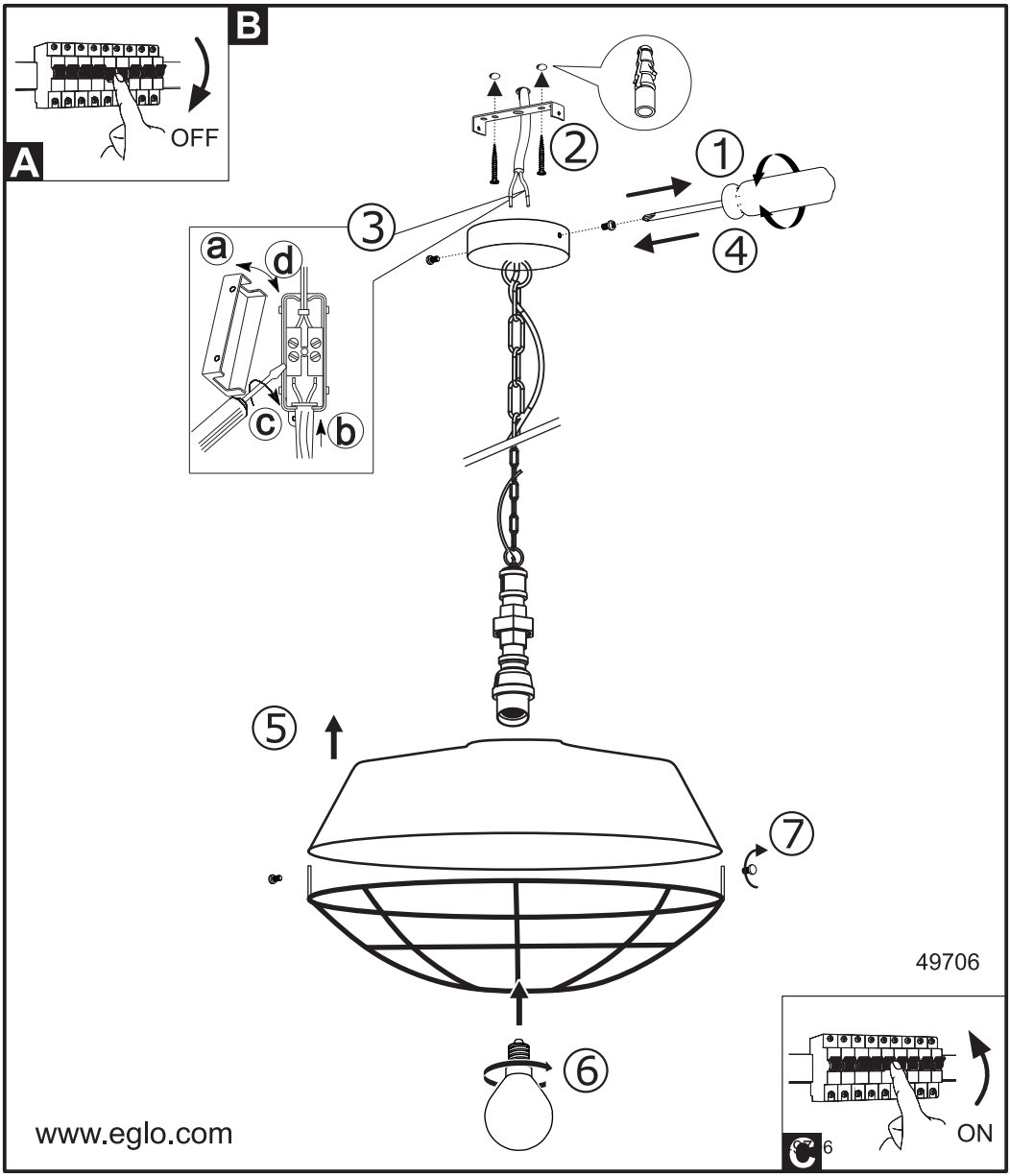
B
A
OFF
1
2
3
4
a
b
c
d
5
6
7
49706
ON
6
www.eglo.com